TOHO ELECTRONICS INC.

Multi-Channel Board Controller

Detailed Manual

Thank you very much for purchasing a Multi-Channel Board Controller.

The Multi-Channel Board Controller outputs control signals that match an input from a thermocouple (a K/J thermocouple) or an input from a temperature input from a resistance bulb (Pt100/JPt100) to a predetermined setting.

The product comes equipped with an RS-485 or an RS-232C for data communications with a host computer.

For control output, the product is provided with up to eight open collector outputs, along with event outputs consisting of 11 open collector outputs (eight temperature alarm outputs, one heater wire break alarm, one SSR breakdown alarm, and one error alarm), eight current detector inputs, and one voltage input.

Please read this detailed manual carefully and use this product correctly.

Contents

1. Operating precautions

When the product reaches you, please ensure that the product you have received is of the following model which you ordered.

Model: **TTM－00BT－①－R－②**

① Input type ..... 0: Thermocouple input
1: Resistance bulb input

② Communication type: M1: RS-485
M2: RS-232C

To allow you to use the product safely, this detailed manual uses the following symbols:

Warning: Mishandling despite this warning may result in the user's death, electric shock, burn, or other risk.

Caution: Mishandling despite this caution may result in the user's minor injury or product damage.

Warnings
• Erroneously wiring a meter will cause a breakdown, possibly resulting in a fire or other incident. After making the connections, therefore, always ensure that the correct wiring has been made before energizing the meter. • Remodeling the product will cause a breakdown, possibly resulting in a fire or other incident. Therefore do not under any circumstances do any such thing.

- Please make sure that the package for the product contains the following:
  - * Product proper: 1 unit
  - * Operation manual: 1 copy

  Should you find anything missing or a wrong model or any other inconvenience, please contact our Sales Department. The contact details are at the end of this manual.
- Please deliver this detailed manual to the user. Please store it with care.
- Unauthorized reproduction or copying of a part or a whole of this manual is prohibited.
- Specifications in this detailed manual are subject to change without notice.
- We may not be able to take responsibility for a nonconformity or trouble resulting from the user's operation of the product.

2. Names and functions of the components

2.1 Product diagram

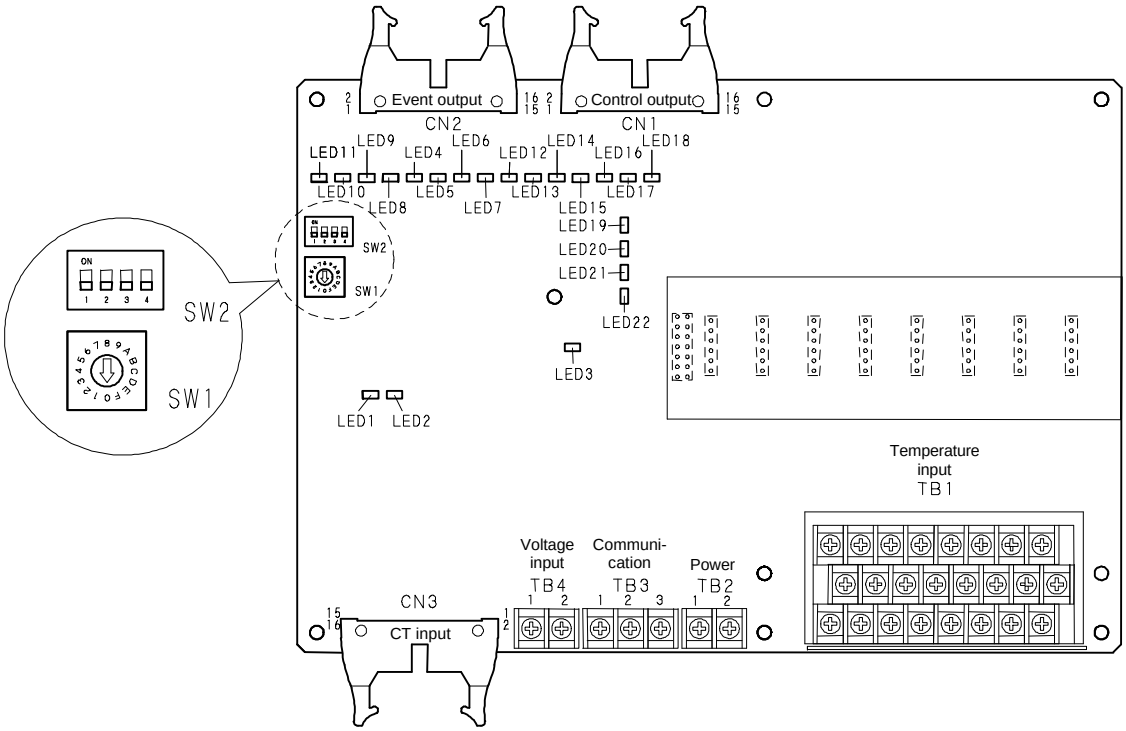

2.2 Names and functions

2.2.1 SW1: Unit number change --- Change product unit numbers with the rotary switch.
Unit number: 0 to F (hexadecimal)

2.2.2 SW2: Communication speed change --- Change the communication speed with DIP switches.
Communication speed setting: 4800/9600/19200/38400 bps

2.2.3 CN1: Control output connector
Connector: XG4A-1634 (Omron) or equivalent (eight open collector outputs)

2.2.4 CN2: Event output connector
Connector: XG4A-1634 (Omron) or equivalent (eleven open collector outputs)

2.2.5 CN3: CT input connector
Connector: XG4A-1634 (Omron) or equivalent (eight CT inputs)

2.2.6 TB1: Temperature input terminal
Sensor input terminal for thermocouple input or resistance bulb input
Thermocouple input: Two-level terminal block: ML-740-W1BF-16P (a Sato part) or equivalent
Resistance bulb input: Three-level terminal block: ML-740-W3BF-24P (a Sato part) or equivalent

2.2.7 TB2: Power terminal
Power voltage terminal (power voltage: 24V DC + 10% - 15%)
Through-type terminal block: ML-40-S1BYF-2P (a Sato part) or equivalent

2.2.8 TB3: Communication terminal
RS-485 or RS-232C communication terminal
Through-type terminal block: ML-40-S1BYF-3P (a Sato part) or equivalent

2.2.9 TB4: Voltage input terminal
Voltage input terminal (input voltage range: 12 to 24V DC ±10%)
Through-type terminal block: ML-40-S1BYF-2P (a Sato part) or equivalent

2.2.10 LED1: Communication A RXD lamp (green)

2.2.11 LED2: Communication B TXD lamp (green)

2.2.12 LED3: Power lamp (green)

2.2.13 LED4 to 11: Temperature alarm output lamps (red)

2.2.14 LED12: Alarm output lamp for heater wire break (red)

2.2.15 LED13: Alarm output lamp for SSR breakdown (red)

2.2.16 LED14: Error alarm output lamp (red)

2.2.17 LED15 to 22: Control output lamps (orange)

Recommended socket for connector
MIL type socket (with strain relief): XG4M-1630-T (manufactured by Omron)

3. Installation

3.1 How to install the product

- See "3.3 Outside dimensions" and install the product with nine screws (ϕ3.5).
- Install the board as floated by at least 5mm with a spacer or something similar.
- Install it horizontally. Or install it vertically with its power supply facing upwards.
- When installing two or more products of this kind, install them at least 50mm apart.
- Connecting crimp terminals: Use crimp terminals of specified dimensions (M3, no more than 6.9mm wide).
- Connecting exposed wires: Use wiring of AWG22 to 16.
- Terminal screws: Tighten them to a specified torque (about 0.5N-m). A loose screw may cause a fire or malfunction.

3.2 Where to install the product

Please install the product in either of the following places:

- Places where the temperature, humidity, and other conditions are within the operating environmental ranges
- Places free of dust, greasy fumes, and other foreign matter
- Places protected as much as possible from mechanical vibration, impact, and other external forces
- Places as far as possible from devices using high-pressure ignition equipment
- Places away from high-voltage lines, welding machines, and sources of electric noises
- Places free of sulfide gases and corrosive gases
- Places protected from direct sunlight
- Places protected from water splashes
- Places protected as much as possible from electromagnetic effects

3.3 Outside dimensions

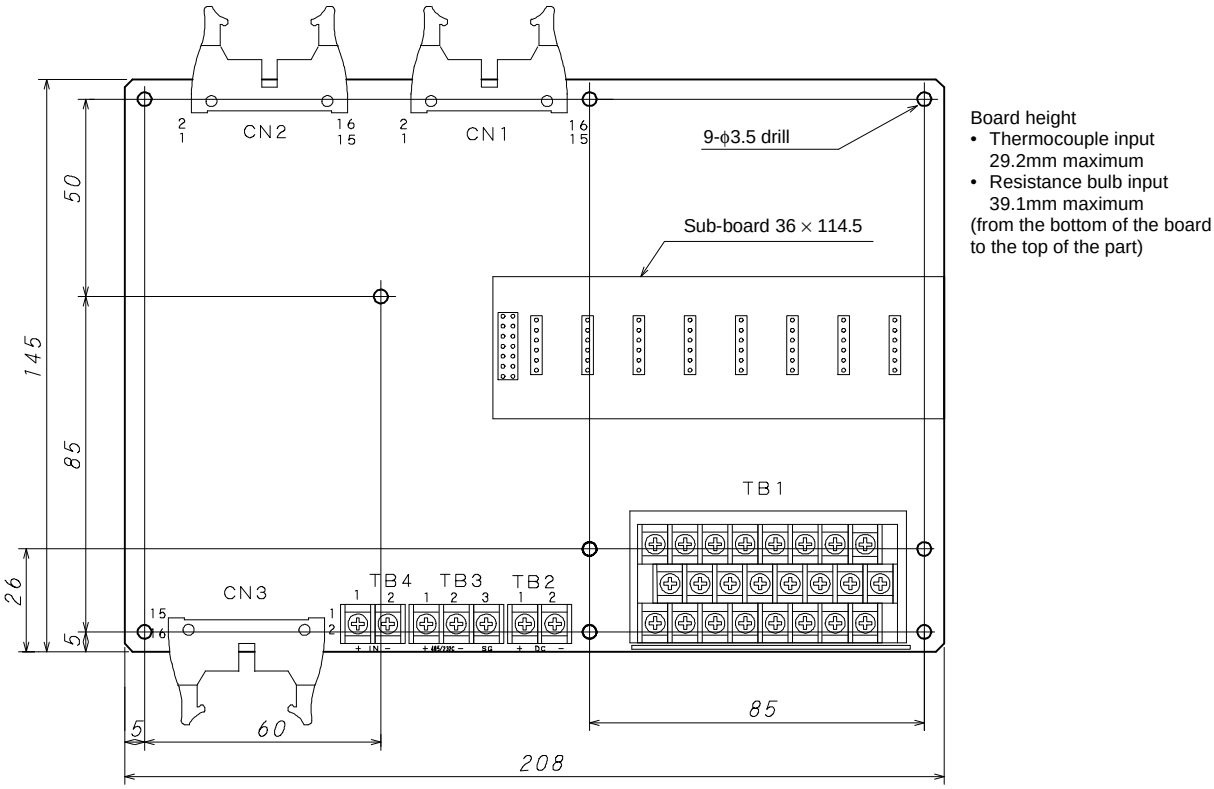

4. Making the connections

4.1 Terminal arrangement diagram

4.1.1 Thermocouple input

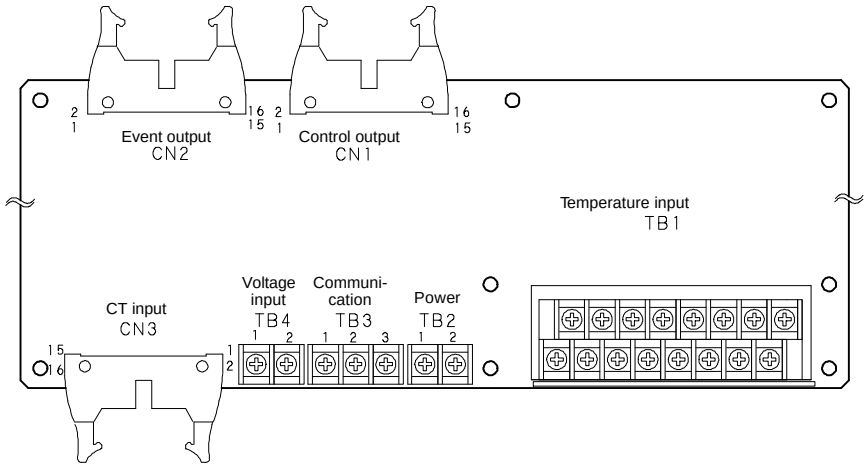

4.1.2 Resistance bulb input

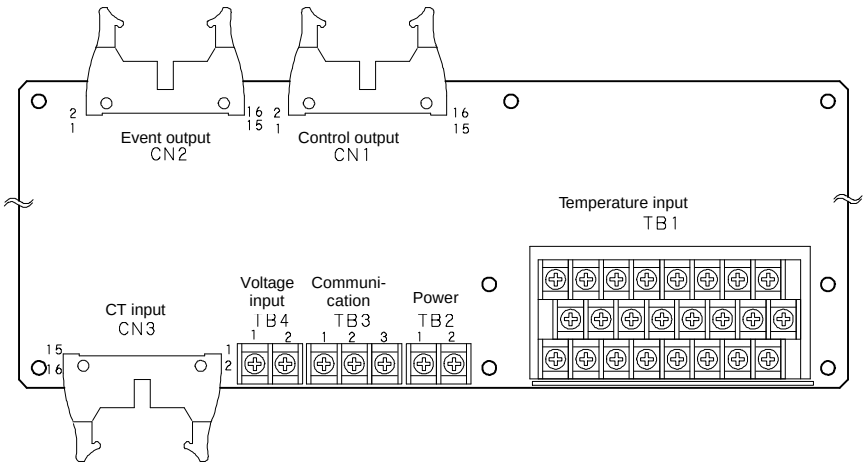

4.2 Terminal arrangement

4.2.1 Temperature input (TB1: terminal block): For thermocouple input

* For terminal numbers, see the carvings in the terminals.

Terminal No.	CH	Terminal name	Terminal No.	CH	Terminal name	Terminal No.	CH	Terminal name	Terminal No.	CH	Terminal name
A1	1	+	A3	3	+	A5	5	+	A7	7	+
B1		–	B3		–	B5		–	B7		–
A2	2	+	A4	4	+	A6	6	+	A8	8	+
B2		–	B4		–	B6		–	B8		–

4.2.2 Temperature input (TB1): For resistance bulb input

Terminal No.	CH	Terminal name	Terminal No.	CH	Terminal name	Terminal No.	CH	Terminal name	Terminal No.	CH	Terminal name
A1	1	A	A3	3	A	A5	5	A	A7	7	A
B1		B	B3		B	B5		B	B7		B
C1		b	C3		b	C5		b	C7		b
A2	2	A	A4	4	A	A6	6	A	A8	8	A
B2		B	B4		B	B6		B	B8		B
C2		b	b4		b	C6		b	C8		b

4.2.3 Power (TB2: terminal block)

Terminal No.	Polarity	Power voltage
1	+	24V
2	–	

4.2.4 Communication (TB3: terminal block)

Terminal No.	RS-485	RS-232C
1	A	RXD
2	B	TXD
3	SG	

4.2.5 Voltage input (TB4: terminal block)

Terminal No.	Polarity
1	+
2	–

4.2.6 Control output (CN1: connector)

Connector No.	CH	Terminal name
1	1	O.C
2	1	COM
3	2	O.C
4	2	COM
5	3	O.C
6	3	COM
7	4	O.C
8	4	COM
9	5	O.C
10	5	COM
11	6	O.C
12	6	COM
13	7	O.C
14	7	COM
15	8	O.C
16	8	COM

O.C.: open collector output
COM: common

4.2.7 Event output (CN2: connector)

Connector No.	CH	Terminal name
1	1	Temperature alarm 1 output O.C.
2	2	Temperature alarm 5 output O.C.
3	3	Temperature alarm 2 output O.C.
4	4	Temperature alarm 6 output O.C.
5	5	Temperature alarm 3 output O.C.
6	6	Temperature alarm 7 output O.C.
7	7	Temperature alarm 4 output O.C.
8	8	Temperature alarm 8 output O.C.
9	1	Temperature alarm 1 to 4 output COM
10	2	Temperature alarm 5 to 8 output COM
11	3	Alarm output O.C. for heater wire break
12	4	Alarm output COM for heater wire break
13	5	SSR breakdown alarm O.C.
14	6	SSR breakdown alarm COM
15	7	Error alarm O.C.
16	8	Error alarm COM

O.C.: open collector output
COM: common

4.2.8 CT input (CN3: connector)

Connector No	CH
1	1
2	1
3	2
4	2
5	3
6	3
7	4
8	4
9	5
10	5
11	6
12	6
13	7
14	7
15	8
16	8

4.3 Cautions on making the connections

⚠ Warning

- Before making the connections, turn off this product. Otherwise you may get an electrical shock.

⚠ Warnings

- This product will not begin control for about 10 seconds after being turned on. (It will not activate its outputs or other components.) Be careful if you wish to use the product as an interlocking circuit.
- Check the operation manual and other documents to ensure that you make the correct connections for the temperature input terminal, power terminal, and other terminals.

- To connect a resistance bulb to this product, use wiring having a line resistance of no more than 5Ω per wire.
- To connect a thermocouple to this product, use a specified kind of compensating lead wire or element wire.
- Use a shielded wire if you wish to use this product near a noise source. Do not wire an input/output line in the same duct or conduit tube.
- Separate the input/output signal lines at least 50cm from the power line and load line.

5. Before conducting control

Selecting PID control

This product is factory-configured to a "proportional band" of 3.0. This product can conduct control in that state. For better control, however, auto-tune (AT) this product. AT automatically sets settings (values P, I, and D) required for control. For AT, put this product into an actual operating state (a state where the sensor input, control output, and other components are wired). AT takes some time.

Selecting ON/OFF control

This product is factory-configured to a "sensitivity" of 0. If conducting control causes the relay to flutter, increase the sensitivity to reduce the flutter. If conducting control causes this product to stabilize at a level lower than the set temperature, increase the parameter "OFF point" to change the ON/OFF point without changing the setting.

6. Table of identifiers (codes)

a) Identifier: A code that represents an item. Enter the code into the identifier field in the message. (The code is a three-digit figure.) The □ in the frame represents SP (:space:ASCII code...20H).

b) Name: Item name

c) R/W: Specifies which function (read or write) is possible for an identifier into the current memory bank, or whether both of those functions are possible.

r/w: Specifies which function (read or write) is possible for a memory bank other than the current one, or whether both of these functions are possible. (This identifier can be read and written in a memory bank.)

d) Description: Gives a description and specifies a set range and other details.

Note: For the R/W to a character not meeting the display conditions, this product responds with "NAK2."

Parameter

a) Identifier Initial value (communication numerical data) TC, thermocouple; Pt, resistance bulb	b) Name	c) R/W	d) Description and set range	e) Remark
SV1 00000	Setting	R/W r/w	R/W of the control settings Thermocouple input: Thermocouple K, 0.0 to 1300.0°C Thermocouple J, 0.0 to 800.0°C Resistance bulb input: PT100/JPT, -199.9 to 500.0°C	
☐CF 00000	Set a temperature unit	R/W	R/W of the °C/°F °C: 00000 °F: 00001	Channel not specified
INP TC: 00000 Pt: 00010	Set an input type	R/W	R/W of the input type settings Thermocouple input models: Thermocouple K: 00000 Thermocouple J: 00001 Resistance bulb input models: Pt100: 00010 JPt: 00011	Neither the thermocouple input nor the resistance bulb input can be changed.
PVG 00100	Set a PV correction gain	R/W r/w	R/W of the PV correction gain setting Set range: 0.50 to 2.00 times	Measurement Gain correction
PVS 00000	Set a PV correction zero point	R/W r/w	R/W of the PV correction zero setting Set range: -199 to 999°C/-199.9 to 999.9°C	Measurement Zero correction
PDF 00001	Set an input filter	R/W	R/W of the input filter setting Set range: 0 to 99 seconds	
☐DP TC: 00000 Pt: 00001	Set a decimal point	R/W	R/W of the decimal point setting No decimal point: 00000 Decimal point provided: 00001	
☐AT 00000	Start/release AT	R/W	R/W of the AT start/release Start: 00001 Release: 00000	The W is not possible during ON/OFF control.

Event output parameters

a) Identifier Initial value (communication numerical data) TC, thermocouple; Pt, resistance bulb	b) Name	c) R/W	d) Description and set range	e) Remark
E * F *: 1 to 8 00000	Temperature alarm output*functional setting	R/W	R/W of the temperature alarm output*functional setting 000 * * Additional functions 0 None 1 Hold 2 Standby sequence 3 Hold + standby sequence PV temperature alarm functions 0 None 1 Deviation top/bottom limit alarm 2 Deviation top limit alarm 3 Deviation bottom limit alarm 4 Deviation range alarm 5 Absolute value top/bottom limit alarm 6 Absolute value top limit alarm 7 Absolute value bottom limit alarm 8 Absolute value range alarm	*1
E * H *: 1 to 8 00000	Set a temperature alarm output*top limit	R/W r/w	R/W of the temperature alarm output*top limit setting Set range: -199 to1500°C/-199.9 to 1500.0°C	*1
E * L *: 1 to 8 00000	Set a temperature alarm output*bottom limit	R/W r/w	R/W of the temperature alarm output*bottom limit setting Set range: -199 to1500°C/-199.9 to 1500.0°C	*1
E * C *: 1 to 8 00000	Set a temperature alarm output*sensitivity	R/W	R/W of the temperature alarm output*sensitivity setting Set range: -199 to1500°C/-199.9 to 1500.0°C	*1
CTF 00000	CT function	R/W	R/W of the presence or lack of an alarm about heater wire break and SSR breakdown 00000: None 00001: Heater wire break alarm function 00002: SSR breakdown alarm function 00003: Heater wire break + SSR breakdown alarm function	Heater wire break: LED12 SSR breakdown: LED13
C * I *: 1 to 8 00000	CT allocation channel	R/W	R/W of the status about the channel to which CT*(1 to 8) should be allocated 00000: None (not allocated) 00001 to 00008: (CH)	Channel not specified
ALB 00000	Error alarm function	R/W	R/W of the presence or lack of memory errors, A/D errors, and sensor error alarms 00000: None 00001: Present	Error alarm: LED14
CT* *: 1 to 8 00000	Set an output current error	R/W	R/W of the current of the heater current detector Set range: 0.0 to 50.0A AC	Channel not specified

Voltage input parameters

a) Identifier Initial value (communication numerical data) TC, thermocouple; Pt, resistance bulb	b) Name	c) R/W	d) Description and set range	e) Remark
DIF 00000	Set a voltage input function	R/W	R/W of the voltage input function setting <table><tr><th>Numerical data</th><th>Function type</th><th>When voltage is applied</th></tr><tr><td>00000</td><td>None</td><td></td></tr><tr><td>00001</td><td>SV/SV2 function</td><td>SV2</td></tr><tr><td>00002</td><td>RUN/READY function</td><td>READY</td></tr><tr><td>00003</td><td>Auto/manual function</td><td>Manual</td></tr><tr><td>00004</td><td>Forward/reverse operation function</td><td>Forward operation</td></tr><tr><td>00005</td><td>Auto-tuning function</td><td>AT start</td></tr><tr><td>00006</td><td>Forward operation (SV2)/reverse operation (SV) function</td><td>Forward operation (SV2)</td></tr></table>	
SV2 00000	Setting 2	R/W r/w	R/W of the control setting 2 Set range: SLL to SLH	

Unit common parameters

a) Identifier Initial value (communication numerical data) TC, thermocouple; Pt, resistance bulb	b) Name	c) R/W	d) Description and set range	e) Remark
AWT 00000	Response delay setting	R/W	R/W of the response delay setting Set range: 0 to 250mS	Channel not specified
MBK 00001	Memory bank reading	R/W	Replaces the specified memory bank with the current memory bank. 00001 to 00008 (example: memory bank 1 is 00001)	No writing is possible during AT.

Monitor window parameters

a) Identifier	b) Name	c) R/W	d) Description and set range	e) Remark
PV1	Measurement	R	Used as a measurement monitor When over-scale: HHHHH (the same is true when the sensor has a wire break) When under-scale: LLLLL	
CM* *: 1 to 8	CT measurement	R	R of the measured current of the heater current detector When over-scale: HHHHH When reading is impossible: -----	When reading is impossible: The CT value cannot be read unless the output of no less than 190mS is turned on.
DIM	DI monitor	R	R of the voltage input monitoring 00000: State where voltage input is not applied 00001: State where voltage input is applied	
OM1	Monitor the control output	R	R of the control output monitoring 000①② ① Output 1 state… 1:ON/0:OFF ② Output 2 state… 1:ON/0:OFF	*2
EM1	Monitor the temperature alarm outputs 1 to 4	R	R of the temperature alarm output monitoring 0①②③④ ①: temperature alarm output 4 ②: temperature alarm output 3 ③: temperature alarm output 2 ④: temperature alarm output 1	*3
EM2	Monitor the temperature alarm outputs 5 to 8	R	R of the temperature alarm output monitoring 0①②③④ ①: temperature alarm output 8 ②: temperature alarm output 7 ③: temperature alarm output 6 ④: temperature alarm output 5	*3
ALM	Monitor the alarm output	R	R of the alarm monitoring 00①②③ ① Alarm output of heater wire break (1:ON/0:OFF) ② Alarm output of SSR breakdown (1:ON/0:OFF) ③ Error alarm output (1:ON/0:OFF)	

Control parameters

a) Identifier Initial value (communication numerical data) TC, thermocouple; Pt, resistance bulb	b) Name	c) R/W	d) Description and set range	e) Remark
SLH TC: 01200 Pt: 05000	Set an SV limiter top limit	R/W	R/W of the SV limiter top limit setting From the bottom limit to the top limit of the set range Provided that the difference from the SV limiter bottom limit setting is no less than 50 digits.	For the range, see 7.1 on page 16.
SLL TC: 0000 Pt: -1000	Set an SV limiter bottom limit	R/W	R/W of the SV limiter bottom limit setting From the bottom limit to the top limit of the set range Provided that the difference from the SV limiter top limit setting is no less than 50 digits.	For the range, see 7.1 on page 16.
□MD 00001	Set the control mode	R/W	R/W of the control mode setting 00000: Control stop (bottom limit output of the operation quantity limiter) 00001: Control execution 00002: Manual control	
CNT 00010	Set a control type	R/W	R/W of the control type setting 00①②③ ① Function 0 Type A 1 Type B (overshoot inhibition function) ② Output 1 control type 0 None 1 PID control 2 ON/OFF control ③ Output 2 control type (only during heating and cooling control) 0 None 1 PID control 2 ON/OFF control	Type A: General and conventional PID control Type B: Our company's unique PID control with reduced overshoot *4
DIR 00000	Set a forward/reverse operation switchover	R/W	R/W of the forward/reverse operation switchover setting 00000: Reverse operation 00001: Forward operation	
MV1 00000	Control output 1 operation quantity	R/W	R/W of the control output 1 operation quantity Display range: 0.0 to 100.0% Set range: ML1 to MH1	
TUN 00002	Set a tuning type	R/W	R/W of the tuning type setting 00001: Auto-tuning output 1 00002: Self-tuning output 1 00003: Auto-tuning output 2 00004: Self-tuning output 2 00005: Auto-tuning output 1/output 2	
ATG 00010	AT factor	R/W	R/W of the AT factor Set range: 0.1 to 10.0 times	
ATC 00020	AT sensitivity	R/W	R/W of the AT sensitivity Set range: 0 to 999°C/0.0 to 999.9°C	
□P1 00030	Set control output 1, proportional band	R/W r/w	R/W of the control output 1, proportional band setting Set range: 0.1 to 200.0%	
□I1 00000	Set an integral time	R/W r/w	R/W of the integral time setting Set range: 0 to 3600 seconds	
□D1 00000	Set a derivative time	R/W r/w	R/W of the derivative time setting Set range: 0 to 3600 seconds	
□T1 00020	Set control output 1, proportional period	R/W r/w	R/W of the control output 1, proportional period setting Set range: 1 to 120 seconds	
ARW 01000	Anti-reset windup	R/W r/w	R/W of the Anti-reset windup Set range: 0.0 to 100.0%	

Control parameters

a) Identifier Initial value (communication numerical data) TC, thermocouple; Pt, resistance bulb	b) Name	c) R/W	d) Description and set range	e) Remark
MH1 01000	Set an operation quantity limiter, top limit	R/W r/w	R/W of the operation quantity limiter, top limit setting Set range: Operation quantity limiter, bottom limit setting to 100.0%	
ML1 00000	Set an operation quantity limiter, bottom limit	R/W r/w	R/W of the operation limiter, bottom limit setting Set range: 0.0 to operation quantity limiter, top limit setting	
□C1 00000	Set a control output 1, control sensitivity	R/W r/w	R/W of the control output 1, control sensitivity setting Set range: 0 to 999°C/0.0 to 999.9°C	
CP1 00000	Control output 1 Set an OFF point	R/W r/w	R/W of the OFF point setting of control output 1 Set range: -199 to 999°C/-199.9 to 999.9°C	
MV2 00000	Control output 2 operation quantity	R/W r/w	R/W of the control output 2 operation quantity Display range: 0.0 to 100.0% Set range: ML1 to MH1	
□P2 00020	Set control output 2, proportional band	R/W r/w	R/W of the control output 2, proportional band setting Set range: 0.10 to 10.00 times (Magnification for output 1, proportional band)	
□T2 00020	Set control output 2, proportional period	R/W r/w	R/W of the control output 2, proportional period setting Set range: 1 to 120 seconds	
MH2 01000	Set an operation quantity limiter, top limit	R/W r/w	R/W of the operation quantity limiter, top limit setting Set range: Operation quantity limiter, bottom limit setting to 100.0%	
ML2 00000	Set an operation quantity limiter, bottom limit	R/W r/w	R/W of the operation limiter, bottom limit setting Set range: 0.0 to operation quantity limiter, top limit setting	
□C2 00000	Set a control output 2, control sensitivity	R/W r/w	R/W of the control output 2, control sensitivity setting Set range: 0 to 999°C/0.0 to 999.9°C	
CP2 00000	Control output 2 Set an OFF point	R/W r/w	R/W of the OFF point setting of control output 2 Set range: -199 to 999°C/-199.9 to 999.9°C	
PBB 00000	Manual reset	R/W r/w	R/W of the manual reset Set range: 0.0 to 100.0% But -100.0 to +100.0% during heating/cooling control	
□DB 00000	Set a dead band	R/W r/w	R/W of the dead band Set range: -100 to 100°C/-100.0 to 100.0°C	
STR	Save data	W	Save data	

*1: If the control output 2 control type is ON/OFF control or PID control (if heating/cooling control is conducted), this product cannot be used as a temperature alarm output.
*2: If the control output 2 control type is used as a temperature alarm output, the monitor for the control output of control output 2 is fixed at 0.
*3: If the control output 2 control type is used as ON/OFF control or as PID control, the temperature alarm output monitor is fixed at 0.
*4: If the control output 2 control type is set to "None": This product produces a temperature alarm output.
For ON/OFF control or PID control: This product performs heating/cooling control.

7. Function description

7.1 Display range and set range of temperature input

7.1.1 Display range and set range of thermocouple input (JIS C 1602 - 1995)

	Set range with a decimal point	Display range with a decimal point	Set range without a decimal point	Display range without a decimal point
K (JIS)	0.0 to 1300.0°C	-40.0 to 1326.0°C	0 to 1300°C	-40 to 1326°C
J (JIS)	0.0 to 800.0°C	-31.0 to 850.0°C	0 to 800°C	-31 to 850°C

7.1.2 Display range and set range of resistance bulb input (JIS C 1604 - 1997)

	Set range with a decimal point	Display range with a decimal point	Set range without a decimal point	Display range without a decimal point
Pt100 (JIS)	-199.9 to 500.0°C	-199.9 to 539.1°C	-199 to 500°C	-199 to 539°C
JPt100 (JIS)				

7.2 Display range and set range of current detector input

7.2.1 Display range and set range: 0.0 to 50.0A AC

7.3 Voltage input

7.3.1 **Voltage input:** Entering a voltage (12 to 24V DC) from outside enables the selection of functions from "7.3.2. Voltage input functions."

7.3.2 Voltage input functions

Function type	When voltage is applied
None	
SV/SV2 function	SV2
RUN/READY function	READY
Auto/manual function	Manual
Forward/reverse operation function	Forward operation
Auto-tuning function	AT start
Forward operation (SV2)/reverse operation (SV) function	Forward operation (SV2)

7.4 Control output

Control output is ensured by open collector output. Control operations can be selected from heating control or heating/cooling control (types A and B). Setting the output 2 control type to "ON/OFF control" or "PID control" activates heating/cooling control.

Note that heating/cooling control is fixed at control output on the side of heating output, and at temperature alarm output on the side of cooling output. See the table below for the allocation of control outputs and temperature alarm outputs for heating control and heating/cooling control.

Input	Heating control		Heating/cooling control	
	Control output	Temperature alarm output	Control output	Cooling output (temperature alarm output is used as cooling output)
1CH	1	1	1	1
2CH	2	2	2	2
3CH	3	3	3	3
4CH	4	4	4	4
5CH	5	5	5	5
6CH	6	6	6	6
7CH	7	7	7	7
8CH	8	8	8	8

7.5 Temperature alarm output

7.5.1 Temperature alarm output: Compare the measurements with the setting value of the temperature alarm output and turn on and off the temperature alarm output.

• Operation table of temperature alarm outputs

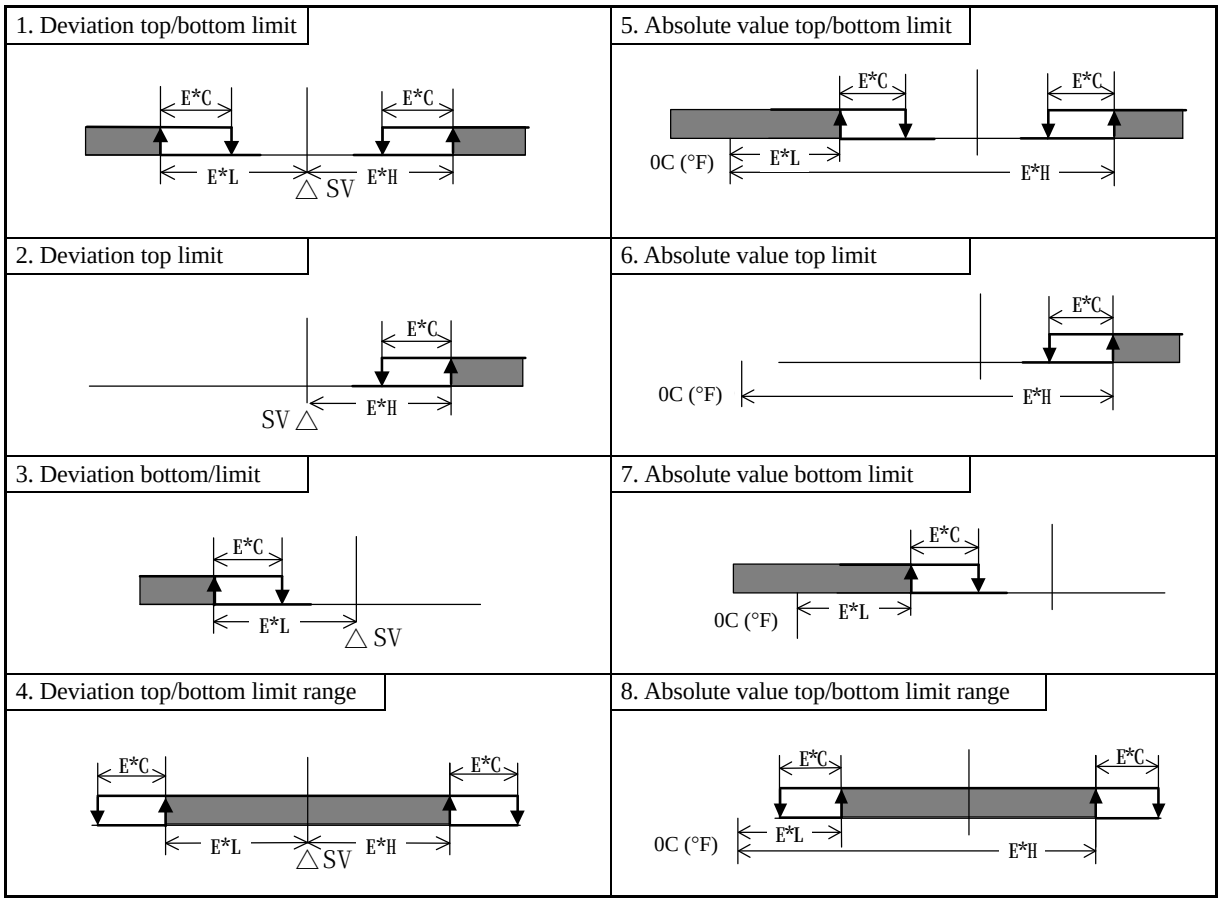

Operation range of temperature alarm output: E*L, bottom limit setting of temperature alarm output; E*H, top limit setting of temperature alarm output; E*C, temperature alarm sensitivity

7.5.2 Additional functions

- Standby sequence

  This function inhibits temperature alarm output even if the conditions are met for temperature alarm output when this product is turned on. Temperature alarm output is generated only when this product deviates from the conditions for temperature alarm output and satisfies those conditions again. This function is used for bottom temperature alarm output when this product is turned on. This function is enabled when this product is turned on in the shaded portion in the operation table of temperature alarm outputs.

  [How to cancel this function]

  This function is canceled when this product is activated or when either of the following setting is changed: target, temperature alarm, PV correction, and temperature alarm setting.

- Temperature alarm output holding

  When a temperature alarm output is generated, this function retains that state. Even if this product deviates from the conditions for temperature alarm output, the temperature alarm output will remain on.

  [How to cancel this function]

  To cancel this function, turn this product off and back on or disable the additional function for temperature alarm output setting.

7.6 Heater wire break alarm output

The output will be turned on if a heater wire break (no output even if the output is turned on) remains for at least 190mS.

7.7 SSR breakdown alarm output

The output will be turned on if an SSR breakdown (there is output even if the output is off) remains for at least 190mS.

7.8 Error alarm output

The output will be turned on in the case of a memory error, A/D error, or sensor error.

7.9 Communication

7.9.1 What can be done by communication

Communication allows you to read and write data in "Changing settings" and "Reading information" and other items specified in "6. Table of identifiers."

However, reading and writing with ordinary commands are conducted on the RAM inside this product. Turning this product off and back on will restore the written data back to what it was before the writing (the values saved on the EEPROM).

To save written data on the EEPROM of this product, execute the data storage request message (STR).

(See "7.9.10 Communication precautions.")

7.9.2 Pre-communication settings:

Before communication, this product must be set to initial settings for "setting a communication speed" and "setting a unit number."

1) "Setting a communication speed": Set this value with DIP switches.
   Use DIP switches 1 and 2. Always turn the 3 and 4 to OFF.
   Following are the possible combinations.

DIP switch				Communication speed
1	2	3	4	
OFF	OFF	Reserved	Reserved	4800 bps
ON	OFF			9600 bps
OFF	ON			192000 bps
ON	ON			384000 bps

Initial setting: 1: ON, 2 to 4: OFF (9600 bps)

2) "Setting a unit number": Set this value with the rotary switch.
   Set a unit number in a hexadecimal number (0 to F).
   Initial setting: 0 (unit No. 00)

3) "Setting a response delay": Set a time to be taken from the time when a high-level computer finishes transmitting a "request message" to the time when the line is delivered and this product enters an input state.
   • Set range: 0 to 250mS
   • Initial value: 0mS

   * Notes: An insufficient response delay may result in abnormal communication. Note also that, in real operations, the processing time of this product will be added to the response delay.

*** Caution: Before "setting a communication speed" and "setting a unit number," always turn off this product.**

7.9.3 Communications procedure

This product returns a "response message" in response to a "request message" from a high-level computer. It therefore does not initiate a transmission.

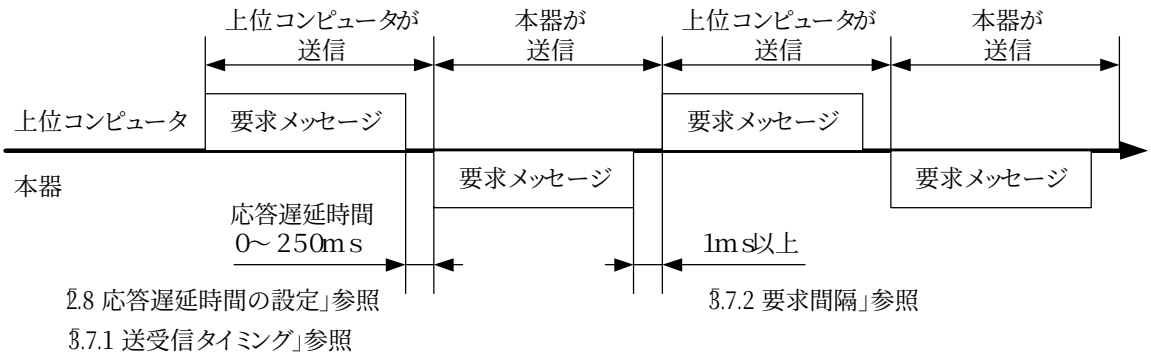

7.9.4 Message types

■ Messages are roughly divided into the following types:

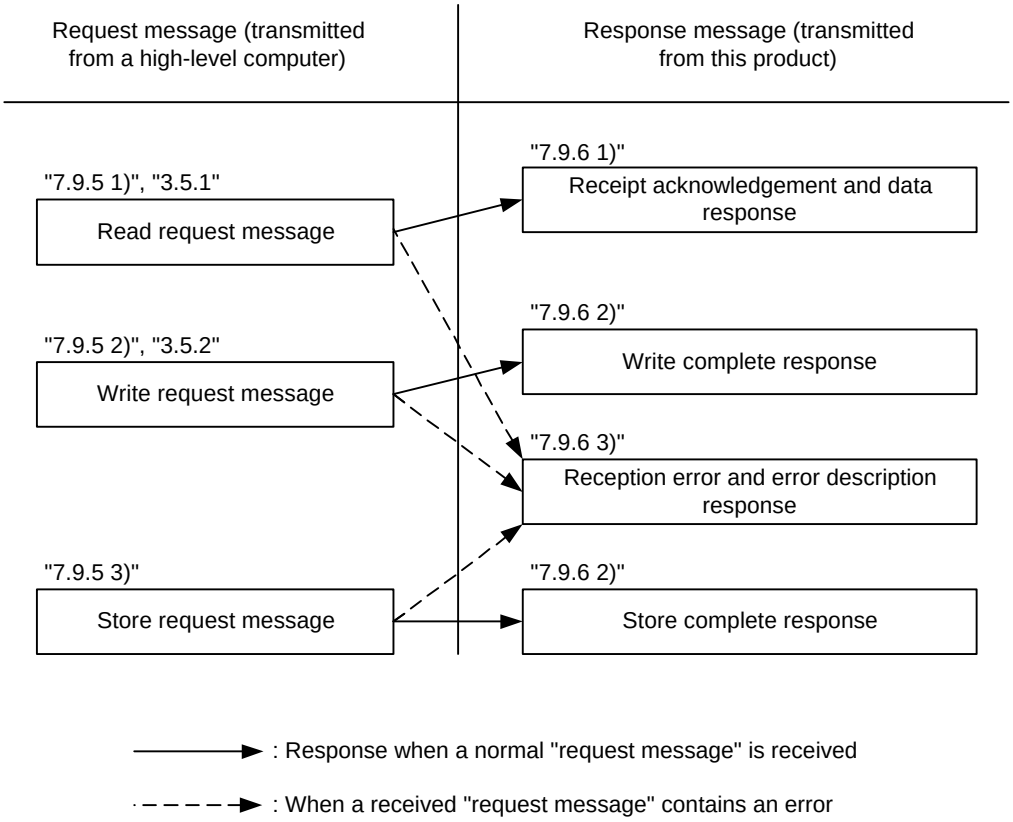

■ All codes (except for BCC) from STX and data to ETX are expressed in ASCII codes.

■ In assembling a program for a high-level computer, see "6. Table of identifiers" and "7.9.13. Table of ASCII codes" at the end of the book.

7.9.5 Composition of a request message (transmitted from a high-level computer to this product)

- For codes ① to ⑧, see "7.9.9 Code description."
- For specific examples of request messages, see "7.9.11 Examples of communications to be read" and "7.9.12 Examples of communications to be written."

1) Composition of a read request message

STX	□	□	R	□	□	□	ETX	BCC
①	②	③	④	—⑤—			⑦	⑧
Start code	Unit number	Channel	Contents of the request: read	Identifier			End code	BCC data

2) Composition of a write request message

STX	□	□	W	□	□	□	□	□	□	□	□	ETX	BCC
①	②	③	④	—⑤—			———⑥———					⑦	⑧
Start code	Unit number	Channel	Contents of the request: write	Identifier			Numerical data					End code	BCC data

3) Composition of a store request message

STX	□	□	W	S	T	R	ETX	BCC
①	②	③	④	—⑤—			⑦	⑧
Start code	Unit number	Channel	Contents of the request: write	Identifier			End code	BCC data

7.9.6 Composition of a response message (transmitted from this product to a high-level computer)

- For codes ① to ⑪, see "7.9.9 Code description."
- For specific examples of request messages, see "7.9.11 Examples of communications to be read" and "7.9.12 Examples of communications to be written."

1) Response message in response to a read request message

STX	□	□	ACK	□	□	□	□	□	□	□	□	ETX	BCC
①	②	③	⑨		—⑤—				———⑥———			⑦	⑧
Start code	Unit number	Channel	Acknowledge code		Identifier				Numerical data			End code	BCC data

2) Response message in response to a write/store request message

STX	□	□	ACK	ETX	BCC
①	②	③	⑨	⑦	⑧
Start code	Unit number	Channel	Acknowledge code	End code	BCC data

3) Response message in the case of an error

STX	□	□	NAK	□	ETX	BCC
①	②	③	⑩	⑪	⑦	⑧
Start code	Unit number	Channel	Error code	ERR type	End code	BCC data

7.9.7 Composition of a memory bank function message

- For codes ① to ⑫, see "7.9.9 Code description."
- For specific examples of request messages, see "7.9.11 Examples of communications to be read" and "7.9.12 Examples of communications to be written." Note that the request is in lowercase characters.

1) Composition of a read request message

STX	□	□	r	□	□	□	□	ETX	BCC
①	②	③	④	⑫	—⑤—			⑦	⑧
Start code	Unit number	Channel	Contents of the request: read	Memory bank No.	Identifier			End code	BCC data

2) Composition of a write request message

STX	□	□	w	□	□	□	□	□	□	□	□	□	ETX	BCC
①	②	③	④	⑫	—⑤—				———⑥———				⑦	⑧
Start code	Unit number	Channel	Contents of the request: write	Memory bank No.	Identifier				Numerical data				End code	BCC data

7.9.8 Setting and reading data collectively

1) Composition of a read request message

a) All channels

STX	□	A	R	□	□	□	ETX	BCC
① Start code	② Unit number	③ Channel	④ Contents of the request: read		—⑤— Identifier		⑦ End code	⑧ BCC data

2) Composition of a write request message

a) All channels

STX	□	A	W	□	□	□	□	□	□	□	□	ETX	BCC
① Start code	② Unit number	③ Channel	④ Contents of the request: write		—⑤— Identifier			———⑥——— Numerical data				⑦ End code	⑧ BCC data

3) Composition of a store request message

a) All channels

STX	□	A	W	S	T	R	ETX	BCC
① Start code	② Unit number	③ Channel	④ Contents of the request: write		—⑤— Identifier		⑦ End code	⑧ BCC data

7.9.9 Code description

- Codes from ① STX to ⑫ memory bank function are expressed in ASCII codes.
- For the ASCII codes, see "7.9.13. Table of ASCII codes."
- For the procedure for conversion to ASCII codes, see communication examples 7.9.11 and 7.9.12.

① STX

This code is necessary for the receiver to detect the top of a message. This is affixed to the top of the character string to be transmitted.

② Unit number

This code is for a higher-level computer to identify the communication partner (this product). Unit numbers are changed by using the rotary switch.

Set range: 0 to F (to be set in a hexadecimal number)

*Before changing a setting, always turn off this product.

③ Setting channels

This function is for setting channels for reading and writing data in this product.

Set range: 1 to 8 (each channel), A (all channels 1 to 8)

*Before changing a setting, always turn off this product.

④ Contents of requests

Enter either of the following codes: R, W, r, or w.

R (uppercase, 52H): For reading data from this product

W (uppercase, 57H): For writing data in this product or for saving data in this product

r (lowercase, 72H): For reading data from the memory bank of this product

w (lowercase, 77H): For writing data in the memory bank of this product or for saving data in this product

⑤ Identifier

An identifier is a classification code (identifier) for data to be read or written and expressed in a three-digit alphanumerical ASCII code. See "6. Table of identifiers."

⑥ Numerical data

These are data to be read or written, and are all expressed in five digits regardless of the type.

Negative data: The "-" (minus) sign is in a single digit at the largest digit.

Position of the decimal point: 5-digit data does not include a decimal point.

Example: The table below indicates the significances of 5-digit numerical data 00010.

Example	Significance of the value
Proportional band (P)	→1.0%
Data (PV), etc, whose decimal point can be shifted When the decimal point setting (DP) is 0	→10
When the decimal point setting (DP) is 0.1	→1.0

⑦ ETX

This code is needed for the receiver to detect the end of a message. It is affixed to the end of a character string to be sent (except for BCC).

⑧ BCC

This is a check code for error detection and is the exclusive OR (EX-OR) of all characters from STX to ETX.

⑨ ACK

It is an acknowledge code. If a message received by this product is error-free, this code will be incorporated in the "response message" from this product and returned.

⑩ NAK

It is a negative acknowledge code. If a "request message" received by this product is error-ridden, this code will be incorporated in the "response message" from this product and returned.

If the "request message" received is error-ridden, the error contents (⑪ ERR type) will be incorporated in the "response message" from this product, following NAK.

⑪ ERR type

If a "request message" received from this product is error-ridden, the error contents (either of the numbers in the table below) will be incorporated in the "response message" from this product, following "⑩ NAK."

The error number 0 is an instrument error (memory error or A/D conversion error). It will be incorporated in the "response message" regardless of whether there is an error in the "request message."

The error number 9 is an AT error. It will therefore be incorporated in the "response message" regardless of whether there is an error in the "request message." Remove the cause of the error immediately and start the AT again.

If there are two or more errors occurring at the same time, the largest error number will be incorporated.

The table below indicates the error contents and classifications.

Error No.	Error contents in the "request message" received by this product
0	Instrument error (memory error or A/D conversion error)
1	The numerical data deviated from the "range of settings designated specifically with setting items."
2	The change of requested items is disabled or there are no items to be read.
3	An ASCII code other than numerical data was specified in the field of numerical data. An ASCII code other than a numerical value or "-" was specified in the field of the highest digit.
4	Format error
5	BCC error
6	Overrun error
7	Framing error
8	Parity error
9	A PV error occurred during AT. Or AT will not end 3 hours later.

⑫ Memory bank number

Up to eight sets per parameter that can be written in the memory bank can be stored in the memory bank. This function is to specify which memory bank 1 to 8 is to be used for reading or writing.

• Number of settings: Up to 8 sets

• Set range: 1 to 8

④ Reading and writing can be done in the memory bank only if the request is "r (lowercase, 72H)" or "w (lowercase, 77H)."

7.9.10 Communications precautions

1) Communications timing

   Set a sufficient response delay to make sure that this product is switched over from transmission to reception with regard to a high-level computer in using communications.

   See "7.9.3 Communications procedure" and "7.9.2 3) Setting a response delay."

2) Interval between requests

   In transmitting a series of "request messages" from a high-level computer, allow for an interval of 1msec or more from the reception of a "response message" from this product to a next transmission.

3) Response conditions

   This product will not return a "response message" unless it receives a "request message" containing an STX and ETX (BCC).

   If, therefore, the "request message" is error-ridden, this product will not return a "response message" (error reply) containing a NAK and ERR unless the conditions mentioned above are met.

   Therefore, the high-level computer transmits the necessary "request message" again if a "request message" is sent to this product but the latter does not return a "response message" at the end of an appropriate period.

   The moment this product receives an STX, it clears all codes received before that.

4) Errors in unit number specification

   This product will not respond to any "request message" that specifies a unit number other than that specified for itself. If, therefore, the a unit number portion of a "request message" is error-ridden, none of the mobile units will return a "response message."

   Therefore, the high-level computer transmits the necessary "request message" again if a "request message" is sent to this product but the latter does not return a "response message" at the end of an appropriate period.

   The moment this product receives an STX, it clears all codes received before that.

5) Number of digits in data and the decimal position

   See "7.9.9 Code description, ⑥ Numerical data."

6) Operation after receiving a store request message

   This product starts to store data after correctly receiving a store request message from a high-level computer.

   This product only stores data different from the contents of the EEPROM (data that is changed). The time (TW) required for storing data is within 2 seconds.

   This product transmits a storage-complete reply (ACK) when the data is stored.

   This product will not guarantee that the data is stored if this product is turned off during a storage operation. Do not turn off this product for 2 seconds after transmitting a store request message.

7) Operation after turning on the power

   This product will not perform communications (no response) for about 3 to 5 seconds after it is turned on. Allow for a delay until communications is started after this product is turned on.

8) Storing data other than a store request message
Store all parameters in the EEPROM in either of the three cases described below, even if no store request message is received.
If auto-tuning is started and ends normally. (Provided that only PID constants are saved.)

9) Changing the settings (SV or SV2) by communications during auto-tuning
Even if the settings (SV or SV2) used in control for auto-tuning are changed by communications, the settings (SV or SV2) will not be changed until the auto-tuning ends.
Note also that memory banks cannot be changed either, during auto-tuning.

7.9.11 Examples of communications to be read

Example: Request message: Requests the reading of a PV value set in channel 4 of unit number 10.
(High-level computer)

In response to that,

Response message: This returns PV data (00777).
(This product)

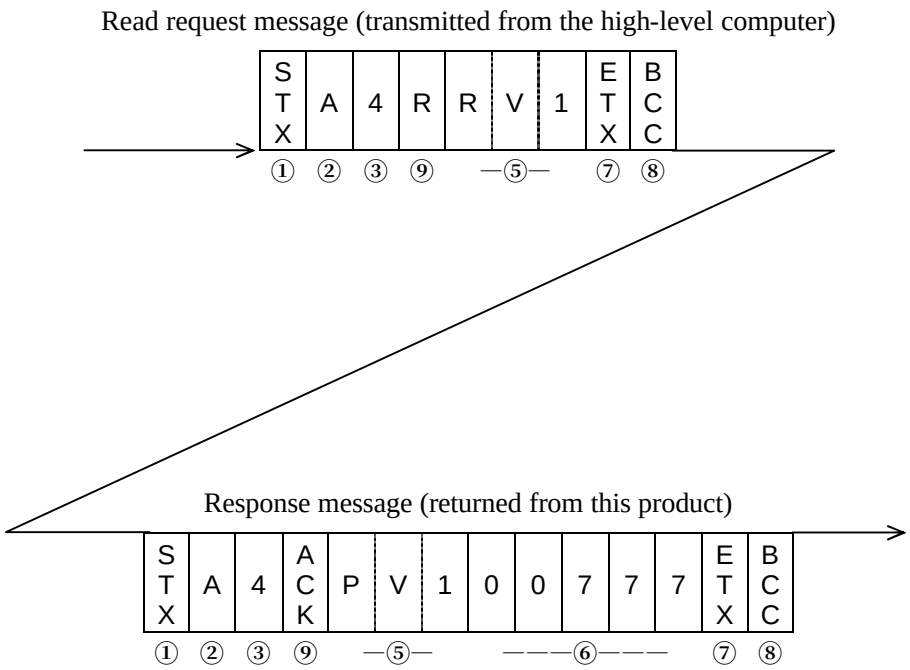

Code	Code, data	ASCII code, note 2)
① Start code	STX	02H
② Unit number	A (10)	41H
③ Channel setting	4	34H
④ Request contents	R (Read)	52H
⑤ Identifier, note 1)	PV1	50H 56H 31H
⑥ Numerical data	00777	30H 30H 37H 37H 37H
⑦ End code	ETX	03H
⑧ BCC data request		11H
response		72H
⑨ Acknowledge code	ACK	06H

Note 1): See "6. Table of identifiers."
Note 2): For the ASCII codes, see "7.9.13. Table of ASCII codes."

7.9.12 Examples of communications to be written

Example: Request message: Requests that the temperature alarm output setting of EIF in channel 1
(High-level computer) of unit number 3 be changed to deviation top/bottom alarm + holding.

In response to that,

Response message: This returns a notice that the request message has been received.
(This product) *Check that it has been correctly written by reading the data separately.

Write request message (transmitted from a high-level computer)

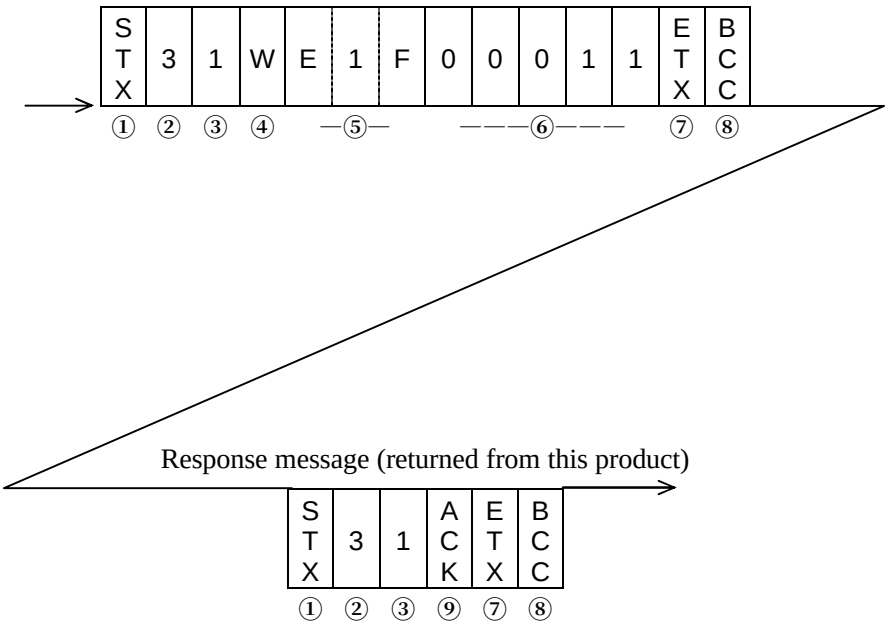

Code	Code, data	ASCII code, note 2)
① Start code	STX	02H
② Unit number	3	33H
③ Channel number	1	31H
④ Request contents	W (Write)	57H
⑤ Identifier, note 1)	E1F	41H 34H 46H
⑥ Numerical data	00011	30H 30H 30H 31H 31H
⑦ End code	ETX	03H
⑧ BCC data request		56H
response		05H
⑨ Acknowledge code	ACK	06H

Note 1): See "6. Table of identifiers (codes)."
Note 2): For the ASCII codes, see "7.9.13. Table of ASCII codes."

7.9.13 Table of ASCII codes

ASCII code	02H	03H	06H	15H						
Code used	STX	ETX	ACK	NAK						

ASCII code	30H	31H	32H	33H	34H	35H	36H	37H	38H	39H
Number used	0	1	2	3	4	5	6	7	8	9

	2DH	20H								
	– Minus	SP Space								

ASCII code	41H	42H	43H	44H	45H	46H	47H	48H	49H	4AH
Code used	A	B	C	D	E	F	G	H	I	J

ASCII code	4BH	4CH	4DH	4EH	4FH	50H	51H	52H	53H	54H
Alphabetical character used	K	L	M	N	O	P	Q	R	S	T

	55H	56H	57H	58H	59H	5AH	20H	72H	77H	
	Y	V	W	X	Y	Z	SP Space	w Lower case	r Lower case	

7.9.14 Communications specifications

1) Communications standard category: Compliant with EIA standard RS-232C or RS-485
2) Communications systems
   : Network..... For RS-485: up to 1 pair, 16 stations
   For RS-232C: 1 pair, 1 station
   : Direction of information..... Half duplex
   : Synchronization system..... Asynchronous
   : Transmission code..... ASCII code

3) Interface system
   : Signal line..... For RS-485: Two-wire type (two transmission and reception lines)
   For RS-232C: Three-wire type (two transmission and reception lines, one SG line)
   : Communications speed ..... 4,800, 9600, 19,200 and 38,400 bps
   Set this with DIP switches.
   : Communications distance ..... For RS-485: 500 mm maximum
   For RS-232C: 15 m maximum
   Provided that it varies somewhat depending on the cable and other ambient conditions.

4) Character

: Start bit length ..... Fixed at 1 bit
: Stop bit length ..... Fixed at 2 bit
: Data length ..... Fixed at 8 bit
: Parity ..... Fixed at no
: BCC check ..... Fixed at yes
: Unit number ..... 0 to F (hexadecimal number)
Set this with the rotary switch.

5) Other functions: Memory bank function: This allows each parameter that can be written in the memory bank to be saved in eight sets.

7.9.15 Communication wiring

1) Connecting the RS-485 line

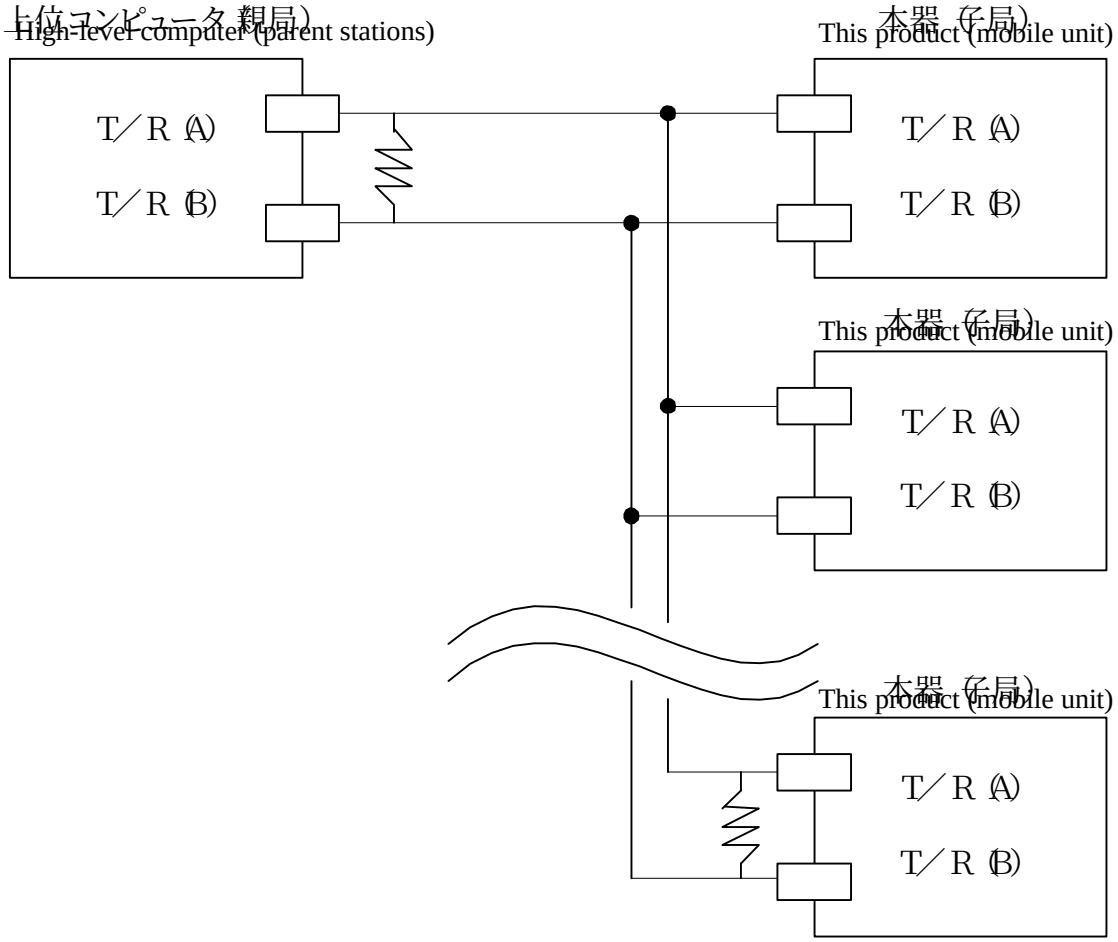

Install an end of line resistor at both of the farthest devices in the parent station and the mobile unit. For a resistance value, use one that matches the characteristic impedance of the cable. Provided that the synthesis is set to at least 75Ω.

2) Connecting the RS-232C

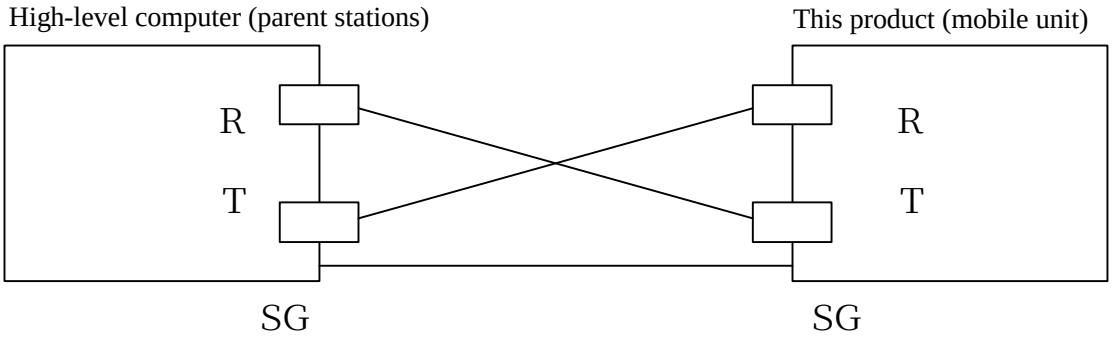

In practice, it is necessary to connect the CS (transmission enable) and the ER (data terminal ready), and connect the RS (transmission request) and DR (data set ready) and CD (reception carrier detection) inside the connectors of the parent station.

8. Specifications and ratings

8.1 General specifications

Power voltage		24V DC + 10% - 15%
Power consumption		8W or less
Insulation resistance		Between inputs and outputs, 500V DC, 20MΩ or more
Withstand voltage		Between inputs and outputs, 500V AC, 1 minute
Standard environment	Temperature/ humidity range	23±10C° / 45 to 75%RH (non-condensing)
	Power voltage	24V DC + 10% - 15%
	Vibration condition	0G
Operating environment	Temperature/ humidity range	-10 to 55°C / 35 to 85%RH (non-condensing)
	Power voltage	24V DC + 10% - 15%
Transportation/ storage environment	Temperature/humidity range	-20 to 65°C / 20 to 90%RH (non-condensing, non-freezing)
	Vibration condition	0.5G (10 to 55Hz, 2 hours in each of the directions X, Y, and Z as installed on a vertical panel)
	Impact condition	0 to 50G (directions X, Y, and Z as installed on a vertical panel, with no continuous impact)
	Package drop	Drop height, 60cm (once each of the six sides, free fall without a rotary motion)
Machine specifications	Weight	Approx. 450g

8.2 Ratings and performance

Temperature input	Input type	Thermocouple input	K and J switchover (JIS C 1602-1995) Input resistance: 1MΩ or more Effect of external resistance: 0.4μV/Ω (0.01°C/Ω) Burnout: Overdisplay Measurement precision: Measurement ±(0.3% + 1 digit) or ±2°C, whichever the larger (to be specified under the standard environmental conditions, including the cold contact compensation program)	
		Resistance bulb input	Pt100/JPt100 switchover (JIS C 1604-1997) External resistance: 0.2°C/Ω or less (per wire) Burnout: Overdisplay Bias current: approx. 2mA (flowing out of terminal A) Measurement precision: Measurement ±(0.3% + 1 digit) or ±0.9°C, whichever the larger (to be specified under the standard environmental conditions)	
	Sampling period		200mS (at channel 8)	
LED display	LED type	Power supply	LED3	Goes on when this product is on (green)
		Control output	LED15 to 22	Goes on when the control output is turned on (red)
		Temperature alarm output	LED4 to 11	Goes on when the temperature alarm output is turned on (red)
		Heater wire break alarm output	LED12	Goes on (red) when there is a heater wire break (there is no output even if the output is turned on)
		SSR breakdown alarm output	LED13	Goes on (red) when there is an SSR breakdown (there is output even if the output is turned off)
		Error alarm output	LED14	Goes on (red) when there is a memory error, A/D error, or sensor error
		Communication	LED1 LED2	Blinks while receiving data (green) Blinks while transmitting data (green)
Control output/ temperature alarm output	Output in a special state		All outputs remain off for about 10 seconds after this product is turned on. The control output is turned off when there is a measurement error.	
	Open collector output		Output rating: 24V DC, 100mA (maximum) per point	
Voltage input	Input voltage range		12 to 24V DC ± 10%	
	ON-state voltage		10.8V (min)	
	ON-state current		4mA (min)	
	OFF-state voltage		4V (max)	
	Minimum input time		500mS or more	
CT input			±5% of the full span	

9. Maintenance and inspection

Symptom	Check item
Inaccurate measurement	Is the sensor normal? (Connect a different sensor to the line. Does it show a similar symptom?) Is the sensor correctly connected? Is the correct sensor type set? (Is the sensor the same as the type setting entered in the product?) Are all the PV correction values set to the correct levels?
The setting does not match the measurement.	Does the heater have a sufficient capacity? Is the integral time (I) set to the correct setting?
Poor control	Is the PID value correct? Perform auto-tuning again.
Abnormal output (control/event output)	Is the output terminal correctly connected? Is the control type set to the correct setting?
No communication occurs	Are the switches SW1 and SW2 set to the correct unit number and communication speed?

If you find any other question or doubt, contact our Sales Department.

TOHO ELECTRONICS INC.
Head office: 1-13-21, Tanashioda, Sagamihara Kanagawa 229-1125 Japan.
Phone: +81-42-777-3311 Fax: +81-42-777-3751

47-9926